Defining Quality. Building Comfort.

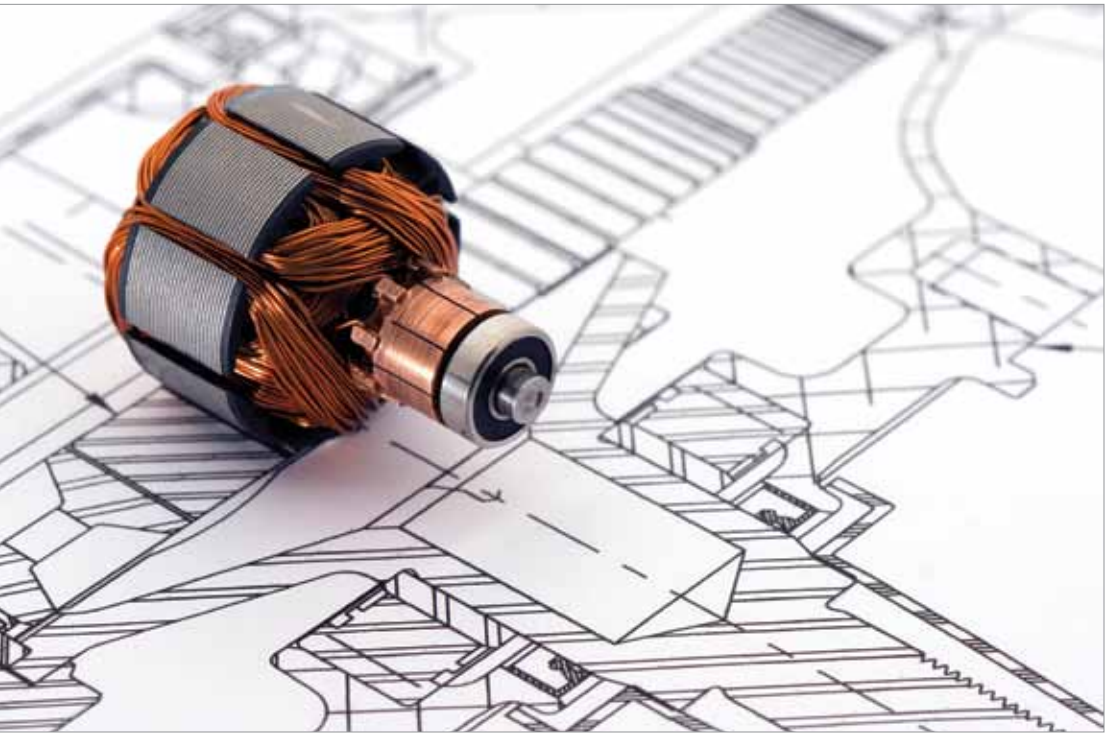

Electric Fan Motor

Characteristics and Benefits

Electric Fan Motor

Characteristics and Benefits

The two most common electronic devices to vary fan speed in HVAC equipment are the variable frequency drive (VFD) and the electronically commutated (EC) motor. The VFD uses an alternating current (AC) induction motor with a controller that varies the motor speed by varying the frequency and voltage of the signal applied to the motor. The EC motor is a direct current (DC) electric motor that converts an AC signal to a DC signal and uses electrical sensors, instead of the mechanical brushes used in the traditional DC motor, to commutate the motor.

How Electric Motors Work

Electric motors use the principles of electromagnetics to produce the torque used to rotate an axle. When current passes through a coil of wire, a magnetic field is induced perpendicular to the plane of the coil (*Figure 1*). A magnetic field produced by an electric current is called an electromagnet. This magnetic effect due to the current loop is amplified when the wire is coiled around a ferrous metal. Magnetic north poles attract magnetic south poles and repel magnetic north poles. These attractive and repulsive forces are manipulated in an electric motor to produce torque, or rotational force, on the axle.

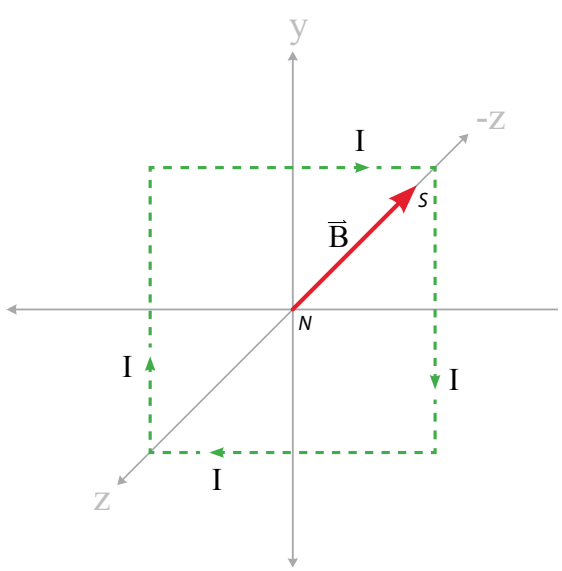

Figure 1: *Current is flowing clockwise through the loop creating a magnetic field, B, directed into the page. The direction of the magnetic field is from the magnetic north pole to the magnetic south pole.*

An electric motor consists of a rotor and a stator. The rotor is the rotating center of the motor that is connected to the axle. The stator is the outside cylinder of the motor. The rotor and stator are separated by an air gap. Magnetic fields on the rotor and the stator that are misaligned (i.e. a north pole near a north pole and a south pole near a south pole) produce a repulsive force. This repulsive force causes the rotor and axle to rotate.

Figure 2 *: Traditional DC Motor Rotor*

Traditional Brushed DC Motor Characteristics

A traditional DC electric motor contains a stationary stator consisting of permanent magnetic poles and a rotating rotor containing wire coils connected to an axle. DC current is connected to the rotor through commutators. The current runs through coiled wire on the rotor, in a direction controlled by the commutator, producing electromagnets. The north poles of the electromagnets will try to align with the south poles of the magnetic field of the permanent magnet stator and the south poles of the electromagnets will try to align with the north poles of the magnetic field of the permanent magnet stator.

This natural desire to properly align the magnetic fields creates torque on the rotor causing rotation. This force, however, becomes zero as the poles of the rotor electromagnets become aligned with the permanent magnetic poles of the stator. Without any change in the magnetic fields, the rotation of the motor would stop as these poles become aligned. In a DC motor, commutators are used to change the direction of the current applied to the motor in order to maintain torque in a constant rotational direction. In order to continue the rotation of the motor, the current is reversed as the poles become aligned, reversing the direction of the magnetic fields produced by the electromagnets. This pole reversal creates a strong repulsive force causing the rotor to rotate and again properly realign its poles with the poles of the stationary magnetic field. As the current continues to reverse, the rotor continues to rotate in the same direction (*Figure 3.1, 3.2, 3.3*).

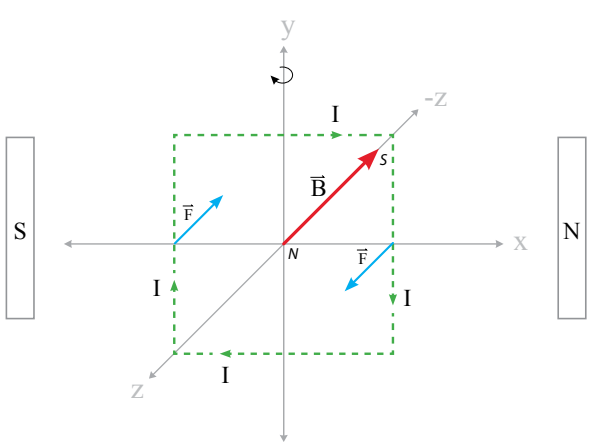

Figure 3.1: *Commutation - rotation around the y axis. I is the current through the loop, $\vec{B}$ is the magnetic field vector, and $\vec{F}$ is the force on the loop.*

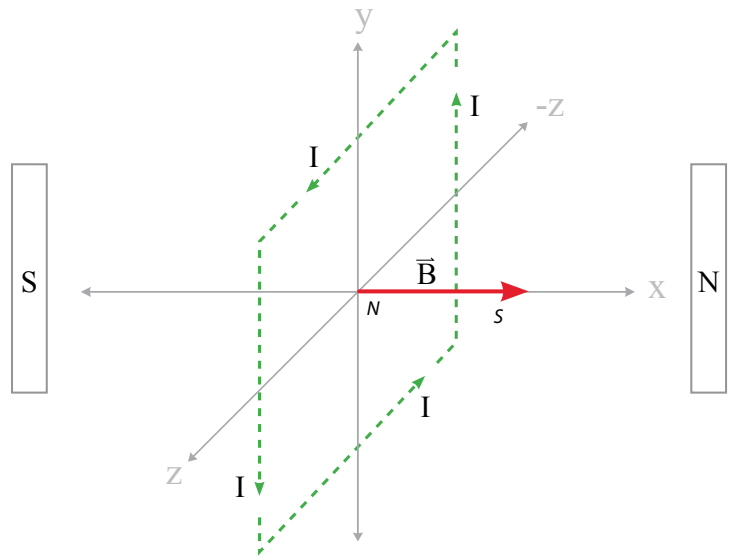

Figure 3.2: *Commutation – as the loop from figure 3.1 rotates along the y axis, the poles reach a "system equilibrium" point where the poles are aligned. At the point where the poles are aligned, no force is acting on the system to align the poles and rotation will stop.*

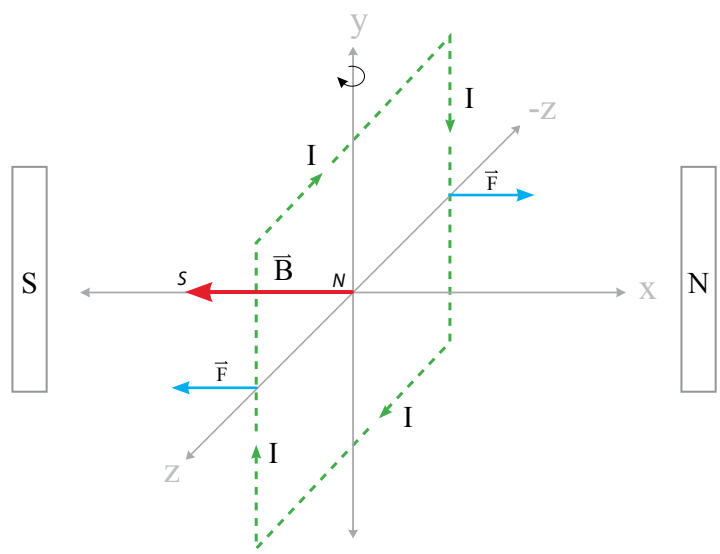

Figure 3.3: *Commutation – In order to continue the loop rotating around the y axis, the current direction is reversed, reversing the direction of the induced electromagnetic field. The magnetic poles are reversed and the rotation continues in the same direction.*

The traditional DC motor uses mechanical brushes to commutate the motor and change the direction of the current through the wire coils. These brushes are typically made of metal or carbon; as the brushes connect with the commutator contacts, current is transferred to the wire coils (*Figure 4*).

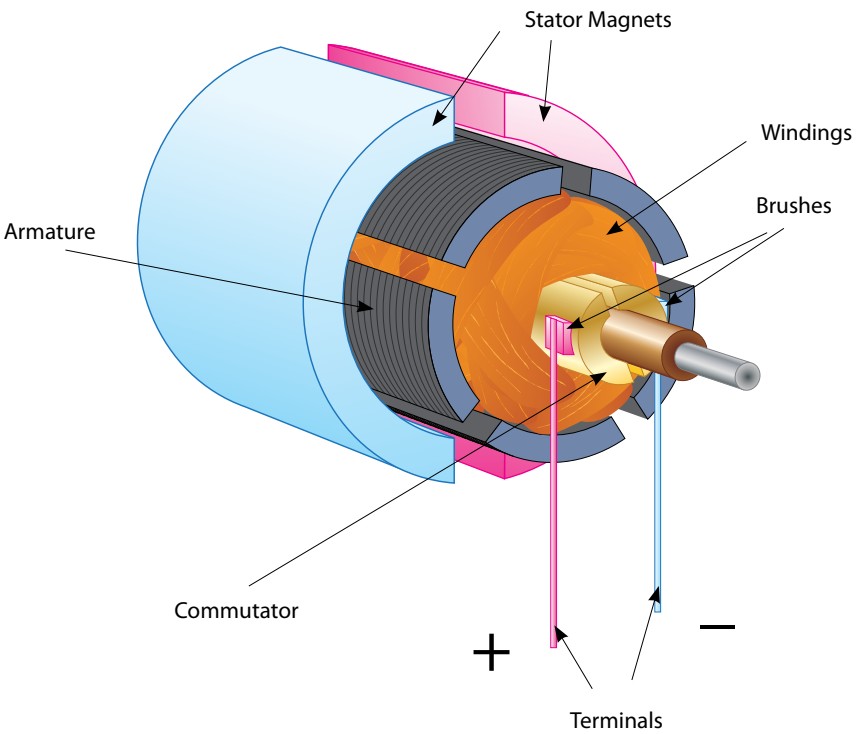

Figure 4: *Brushed DC motor*

DC Motor Advantages

Speed control is possible on a DC motor by simply changing the voltage applied to the commutators. This method of speed control allows the speed of the motor to be varied from full load speed down to about five percent of the full load speed.

DC Motor Disadvantages

The brushes of the traditional, brushed DC motor, however, require regular maintenance and the friction between the commutator and brushes can create sparks and excessive heat as well as audible noise. The sparks, heat, and noise caused by the brushed commutators are all sources of energy loss, causing the brushed DC motor to have a lower efficiency than other types of motors. In addition to this lower efficiency, the brushes wear down through regular use, releasing debris. The wear of the brushed commutators requires the motor to be maintained and the brushes to be replaced regularly and reduces the reliability of the motor.

AC Induction Motor Characteristics

The stator of a standard AC induction motor consists of numerous wire coils with aluminum or cast iron cores. AC power is connected to these wire coils to produce a rotating magnetic field. The speed of this magnetic field around the stator is called the synchronous speed.

Most induction motors contain a squirrel cage rotor. A squirrel cage rotor consists of axially parallel conductor strips of aluminum or copper around an iron rotor core (*Figure 5*). The rotating magnetic field due to the stator electromagnets induces a current in the conducting strips in the rotor and thus creates an alternating magnetic field in the rotor. The rotor then rotates to try to align the magnetic field of the rotor with the rotating magnetic field of the stator. The rotor moves at a slower speed than the rotating magnetic field of the stator. The rotor rotational speed can get close to, but never as fast as, the synchronous speed of the rotating stator magnetic field which is determined by the frequency of the AC source and the number of stator poles in the motor construction. For example, a four pole induction motor with an applied frequency of 60 Hz would have a synchronous speed of 1800 rpm and might have a rotor speed of 1760 rpm. The difference between the speed of the rotating stator magnetic field and the speed of the rotor is called the slip of the

motor. For a motor with a synchronous speed of 1800 rpm and a rotor speed of 1760 rpm, the slip is about 2.2 percent [((1800-1760)/1800)=2.2%]. As the load on the rotor axle increases, the rotor rotational speed slows down and the slip of the motor increases. As the load on the rotor axle decreases, the rotor rotational speed increases and the slip of the motor decreases.

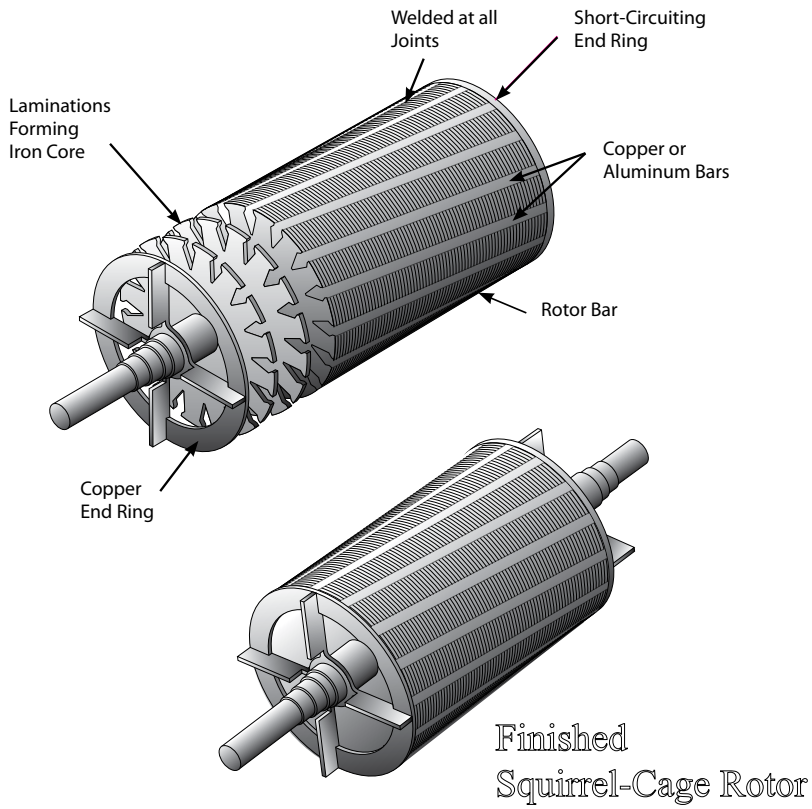

Figure 5: *Squirrel-Cage Induction Rotor*

Applying a constant voltage to an induction motor with a constant torque load on the axle results in a constant rotor rotational speed. When variable speed control is needed on an induction motor, a VFD can be used. The VFD is an electronic device that varies the voltage and frequency applied to the motor to allow the motor to run at a reduced speed while still producing the torque required to turn the load on the axle. Reducing the frequency of the applied signal reduces the synchronous speed of the motor. Varying both the applied frequency and the applied voltage allows the torque and the speed of the motor to vary.

AC Induction Motor Advantages

Induction motors can achieve high efficiencies, especially for large horsepower motors. Squirrel cage induction motors are available in a large variety of sizes. Induction motors are typically less expensive than DC motors because they do not contain the permanent magnets of the DC motor. Squirrel cage induction motors are versatile and typically have long motor lives.

AC Induction Motor Disadvantages

Variable speed control on an induction motor requires a separate VFD to be installed. In addition, induction motors become less efficient in small horsepower motors.

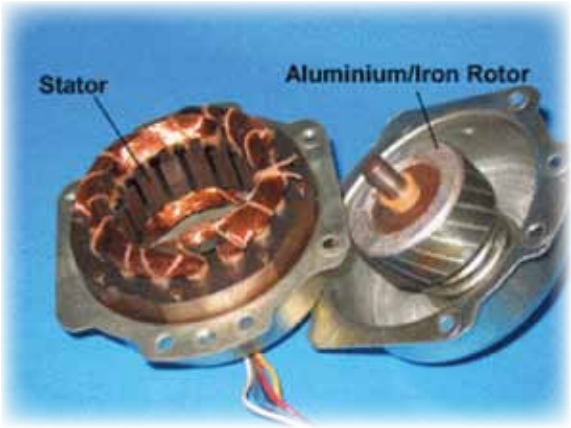

Figure 6 *: AC induction motor*

EC Motor Characteristics

The brushless DC motor, also known as the electronically commutated or EC motor, improves the design of the traditional brushed DC motor by using an electronic controller to commutate the motor instead of the mechanical brushes of the traditional DC motor.

In an EC motor, like an induction motor, the electromagnets produced by the wire windings are on the stator. The rotor consists of permanent magnets. The configuration of the EC motor uses permanent magnets and coiled wire, as in a standard DC motor, simply with the rotor and stator reversed. The use of a permanent magnet in the EC motor requires commutation, like in the traditional brushed DC motor. Instead of the brushed commutators of the tradition DC motor, an EC motor uses Hall Effect sensors to commutate the motor. Hall Effect sensors are transducers that change their output voltage based on changes in the magnetic field. The detectors are used to determine the position of the permanent magnet and thus determine the relative position of the rotor and stator. This allows the motor to commutate without any short in the circuit, as is required with the mechanical commutation of the brushed DC motor.

Figure 7: *Brushless DC Motor*

EC Motor Advantages

The Hall Effect sensors of the EC motor are more reliable than the brushed commutators of the brushed DC motor, increasing the reliability of the motor. Because there are no mechanical brushes in the EC motor, the EC motor does not require regular brush maintenance. In addition, the EC motor eliminates the energy losses due to the brushed commutators of the traditional DC motor. This makes the EC motor operation quieter, cooler, and more efficient than the traditional brushed DC motor. The EC motor controller makes the EC motor a versatile method of speed control when compared to an AC motor with a VFD controller because the EC motor controls and setup are included with the motor, with minimal field setup or configuration required. In an AC motor the synchronous speed is dependent on the frequency of the AC signal; a motor rated for 60 Hz will operate differently if connected to a 50 Hz signal. EC motors convert any frequency of AC signal to a DC signal with no change in the operation of the motor.

EC Motor Disadvantages

The EC motor requires a controller to determine when to commutate which increases the initial cost of the motor compared to a brushed DC motor. The permanent magnets of the DC motor are more expensive than the induced electromagnets of an AC induction motor.

Conclusion

Both VFD driven induction motors and electrically commutated DC motors are efficient and effective ways to provide fan speed control. EC motors are typically available in smaller horsepower motors while induction motors are available in larger horsepower motors. Induction motors typically have high efficiencies but tend to become less efficient as the motor horsepower decreases. EC motors have high efficiencies but are only available in smaller horsepower motors. EC motors typically cost more than AC induction motors due to the use of expensive permanent magnets. AC induction motors, however, require an additional VFD to provide speed control, adding to the initial cost of the motor system, whereas speed control is built in and included in the initial cost of the EC motor.

Currently, the choice between an EC motor and an induction motor depends on the individual horsepower and efficiency requirements of the particular job. AAON uses both EC motors and VFD driven induction motors wherever the individual benefits of each motor can be optimized. Contact your local AAON representative to find out more about the solutions AAON can provide for you!

Defining Quality. Building Comfort.

2425 S. Yukon Ave. • Tulsa, OK 74107 • (918) 583-2266

It is the intent of AAON to provide accurate and current product information. However, in the interest of product improvement, AAON reserves the right to change pricing, specifications, and/or design of its product without notice, obligation or liability. Copyright © AAON, all rights reserved throughout the world. AAON® and AAONAIRE® are registered trademarks of AAON, Inc., Tulsa, OK.

ECM • V02990 • 110322